Lab 7: Strings and File I/O

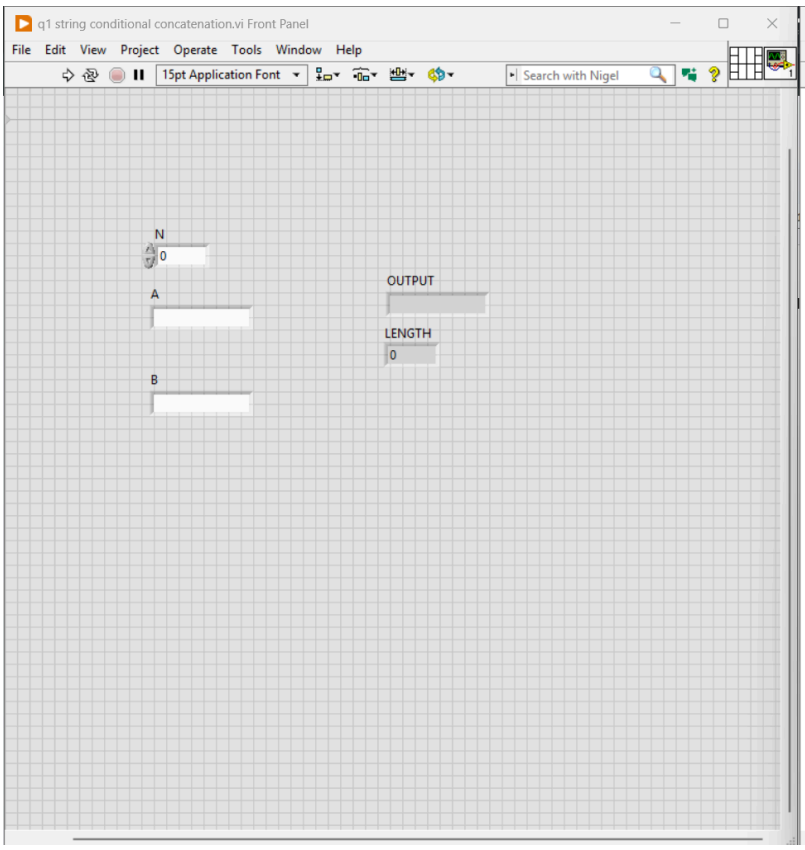

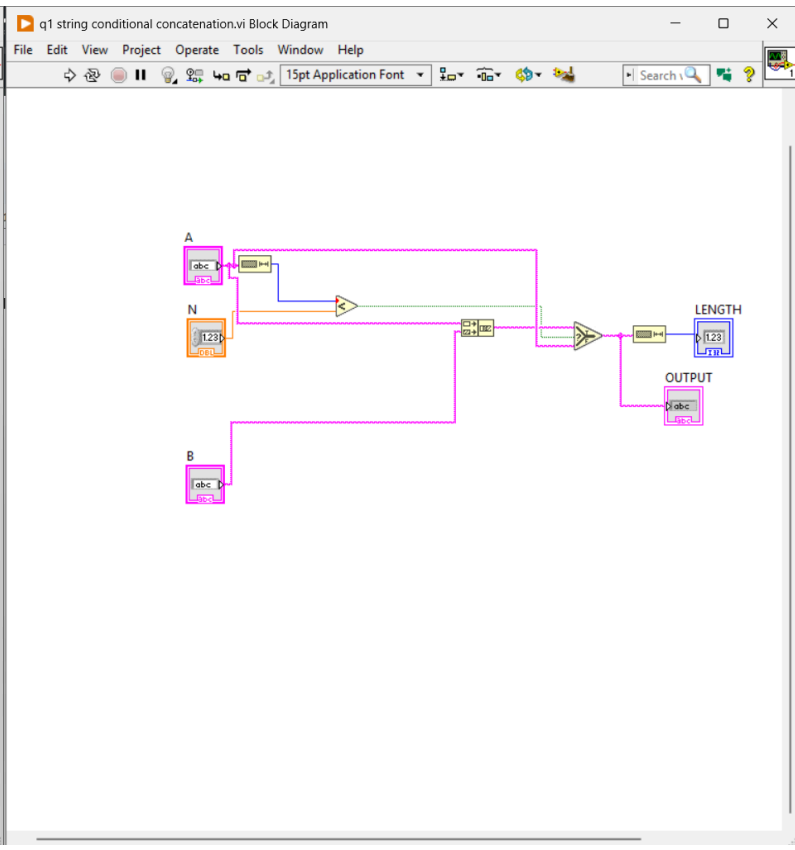

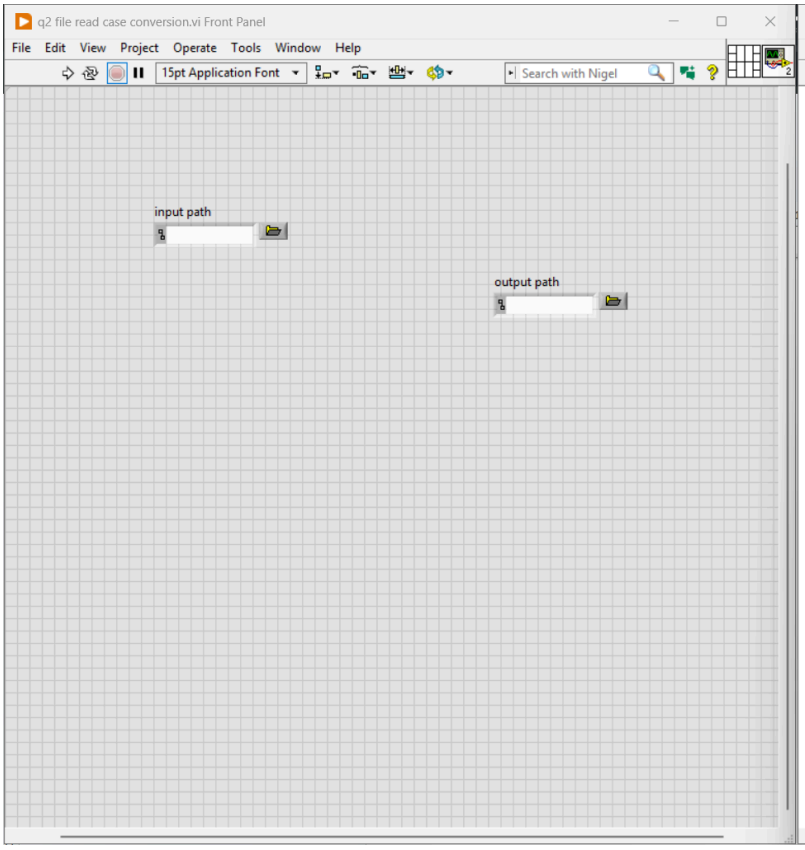

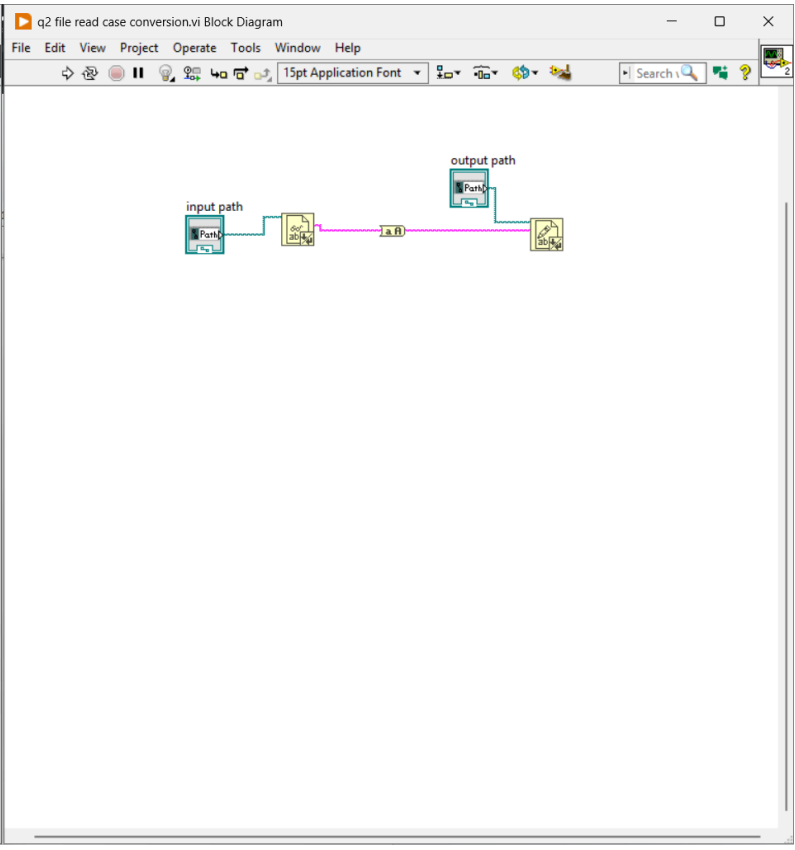

Lab 7: Strings and File I/O

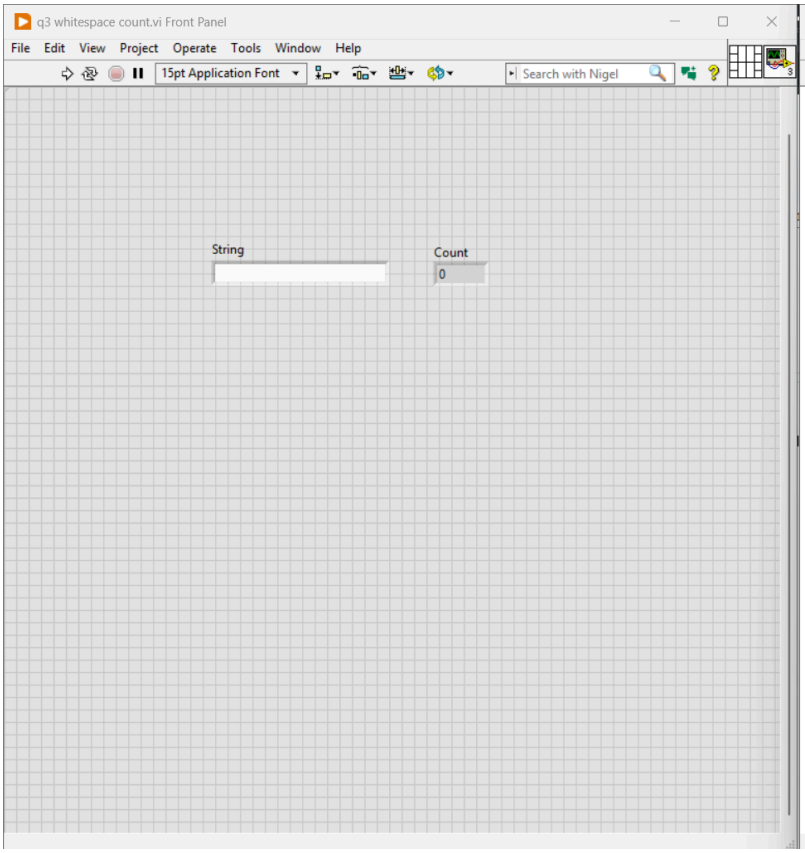

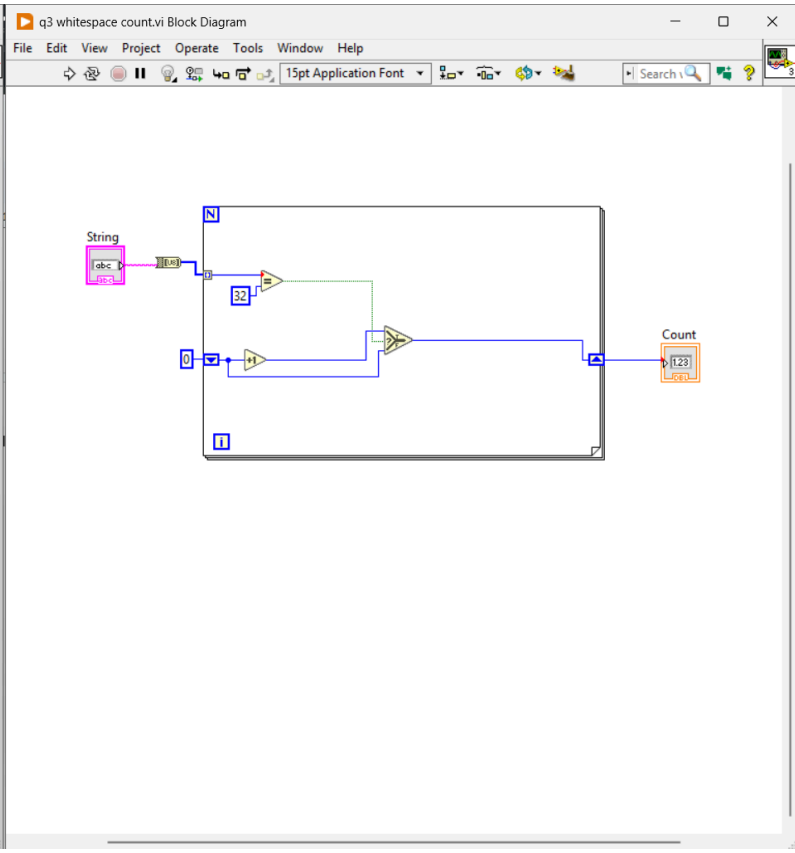

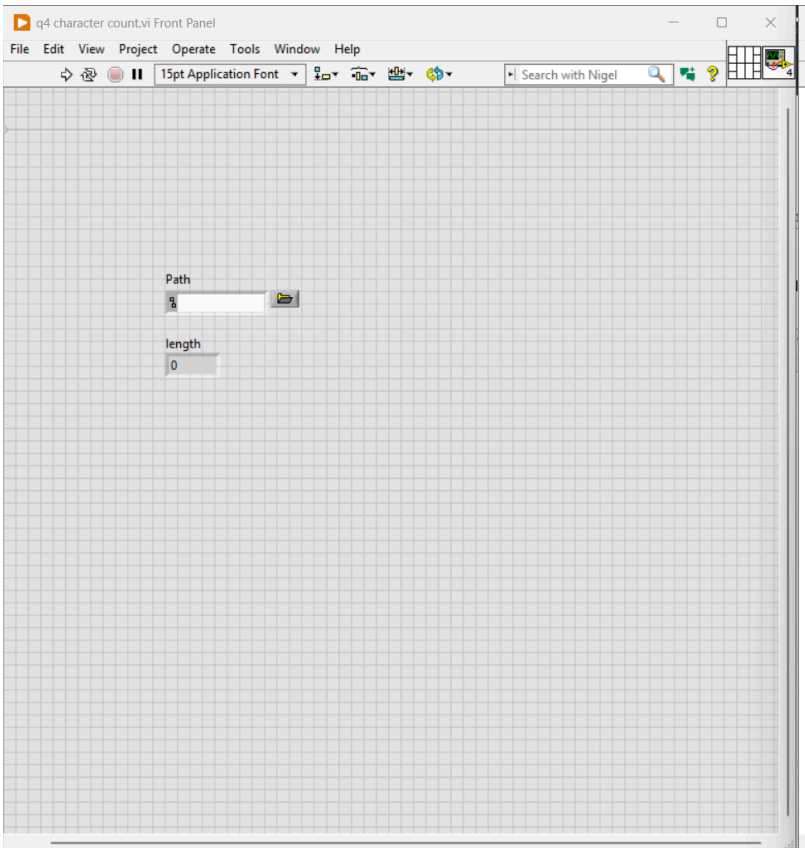

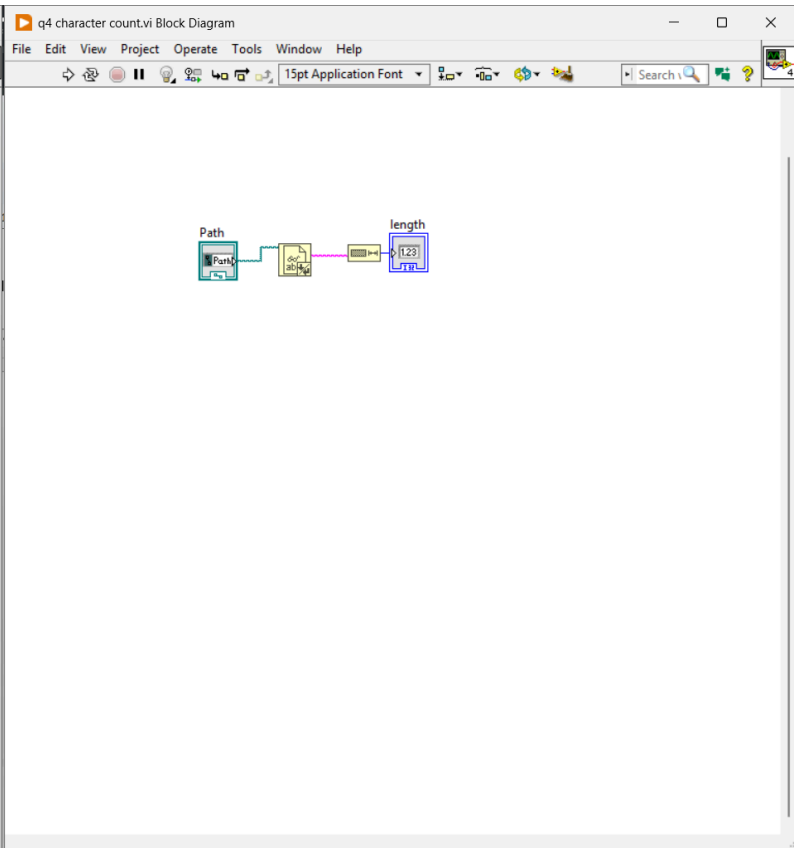

Lab 7: Strings and File I/O

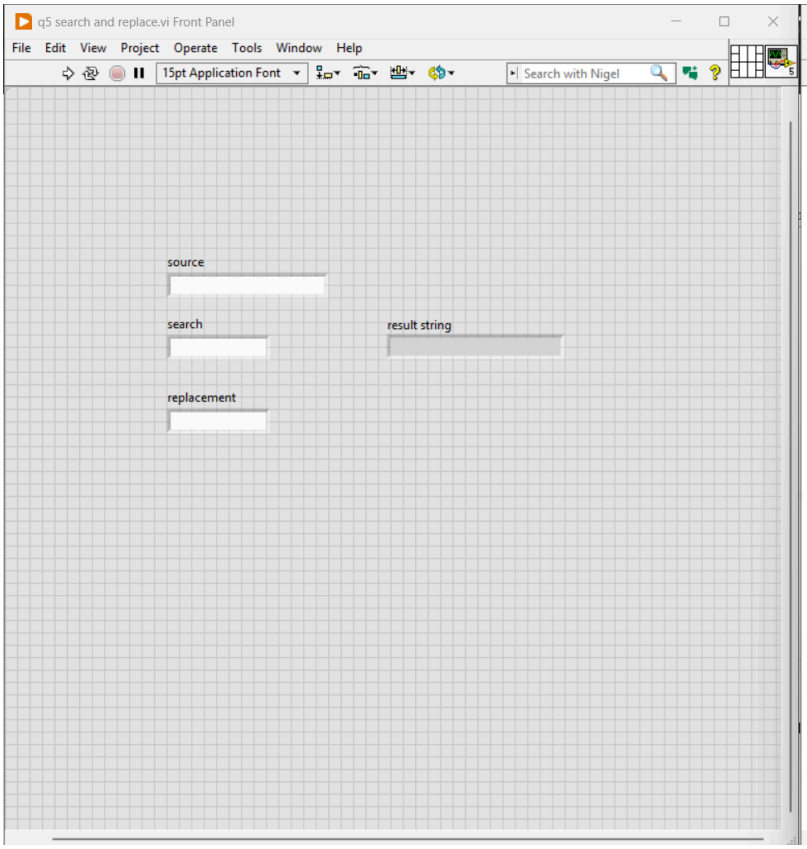

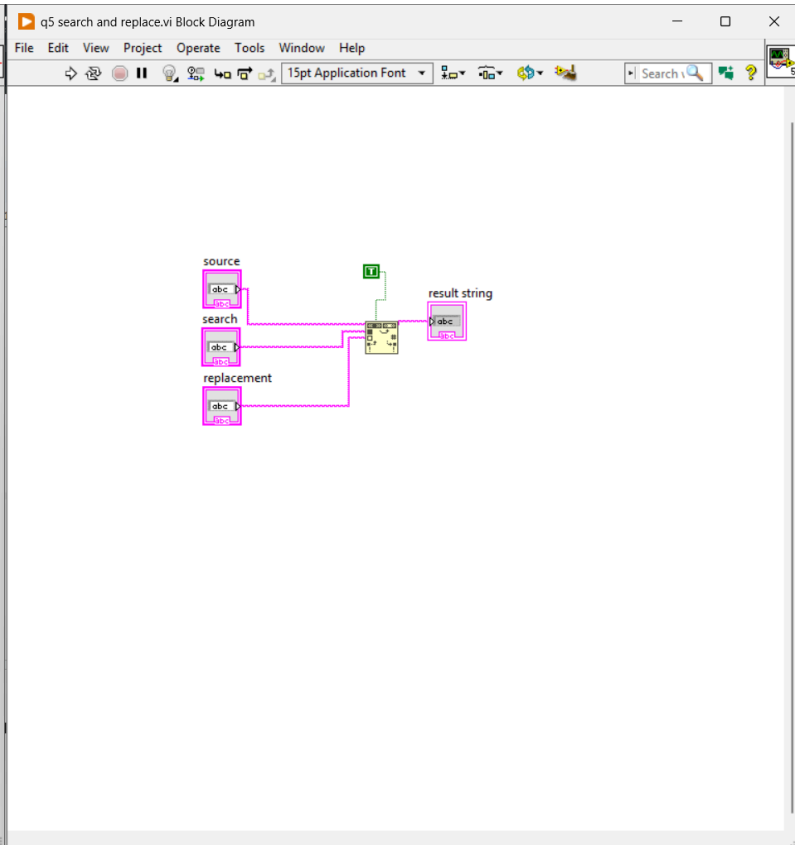

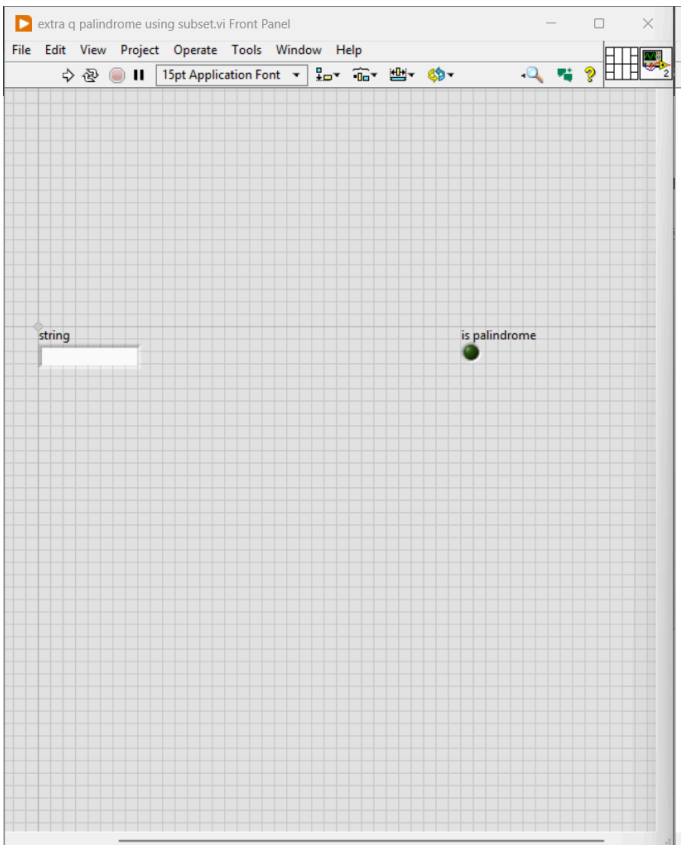

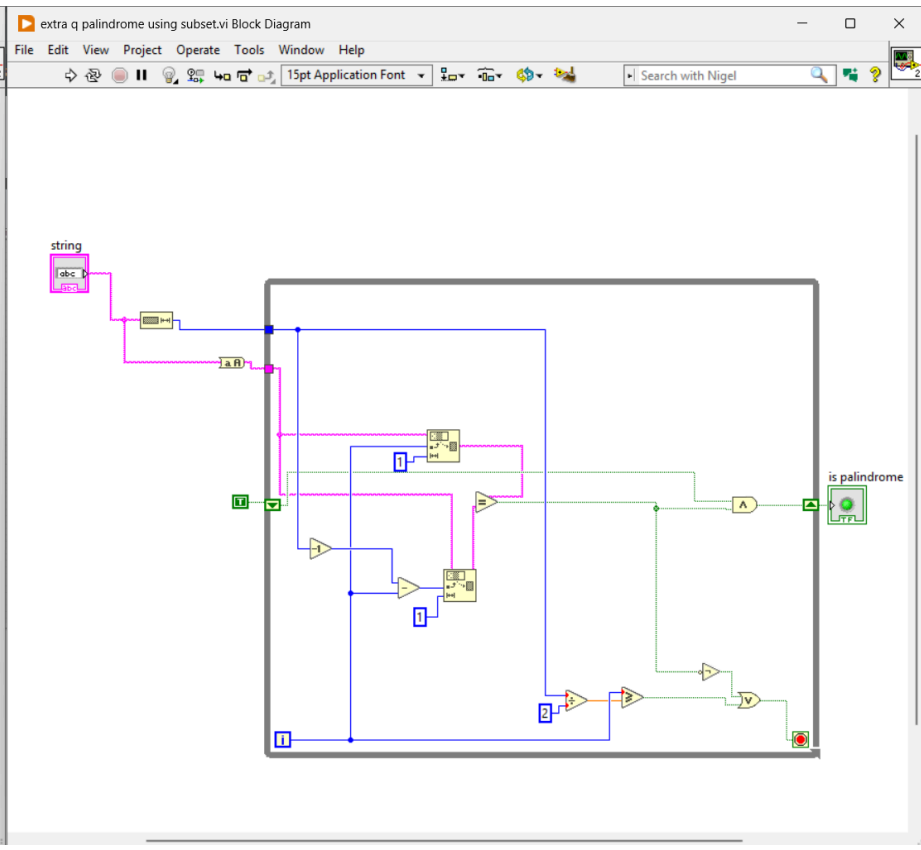
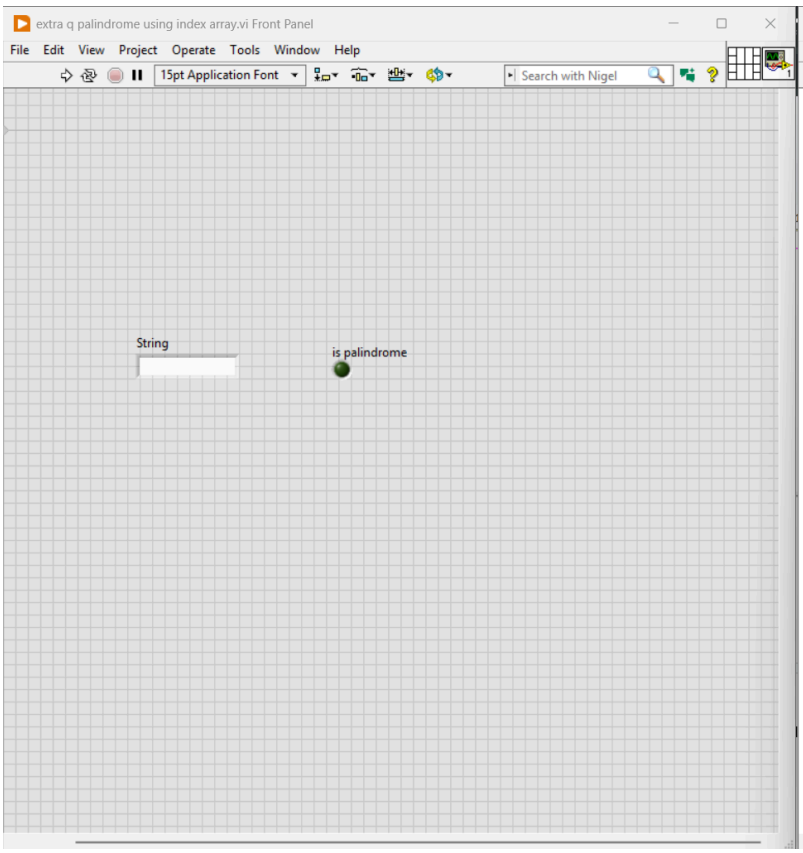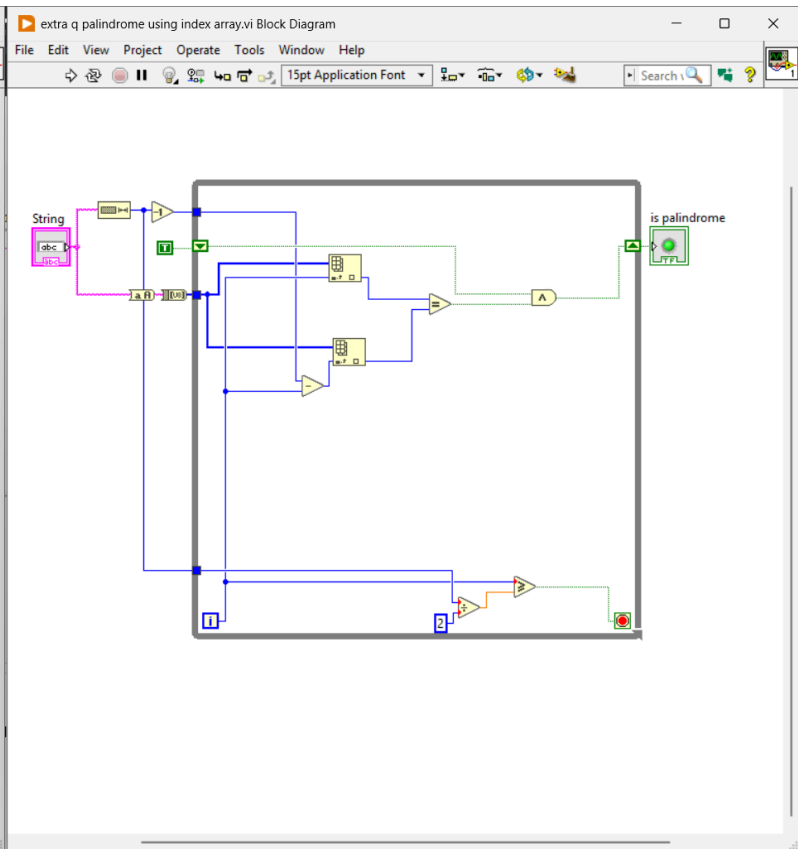
Lab 7: Strings and File I/O